10M/100M/1000M BASE-T Dual PORT Magnetics Modules

Features:

- **Designed to Support 1:1 Turns Ratio Transceivers,Full duplex applications**
- **Supports 4 pairs of category 5 UTP cable**
- **Comokuant with IEEE 802.3ab**
- **Operating temperature -40℃ to 85℃**
- **Minimum interwinding breakdown voltage of 2500Vrms**

Electrical Specifiations @ 25℃

Part Number	Insertion Loss (dB Max)	ReturnLoss (dB min)		Common to Common Mode Rejection (dB min)	Crosstalk (dB min)
	0.1MHz to 100MHz	0.5MHz to 40MHz	40MHz to 100MHz	0.1MHz to 100MHz	30MHz 60MHz 100MHz
YT18-3207S	-1.4	-14.4	-12	-40	-43.5 -37.5 -33

Schematics

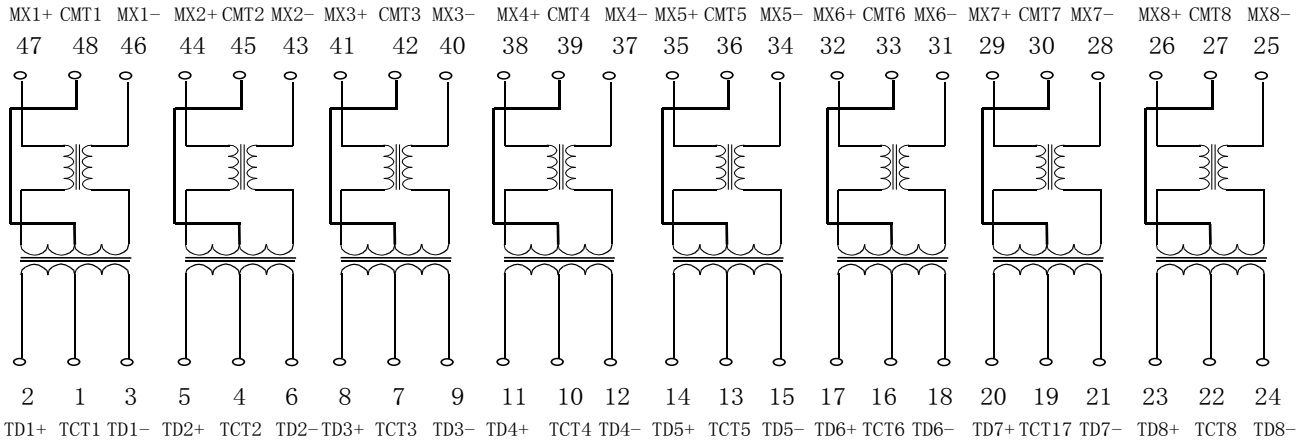

Mechanicals

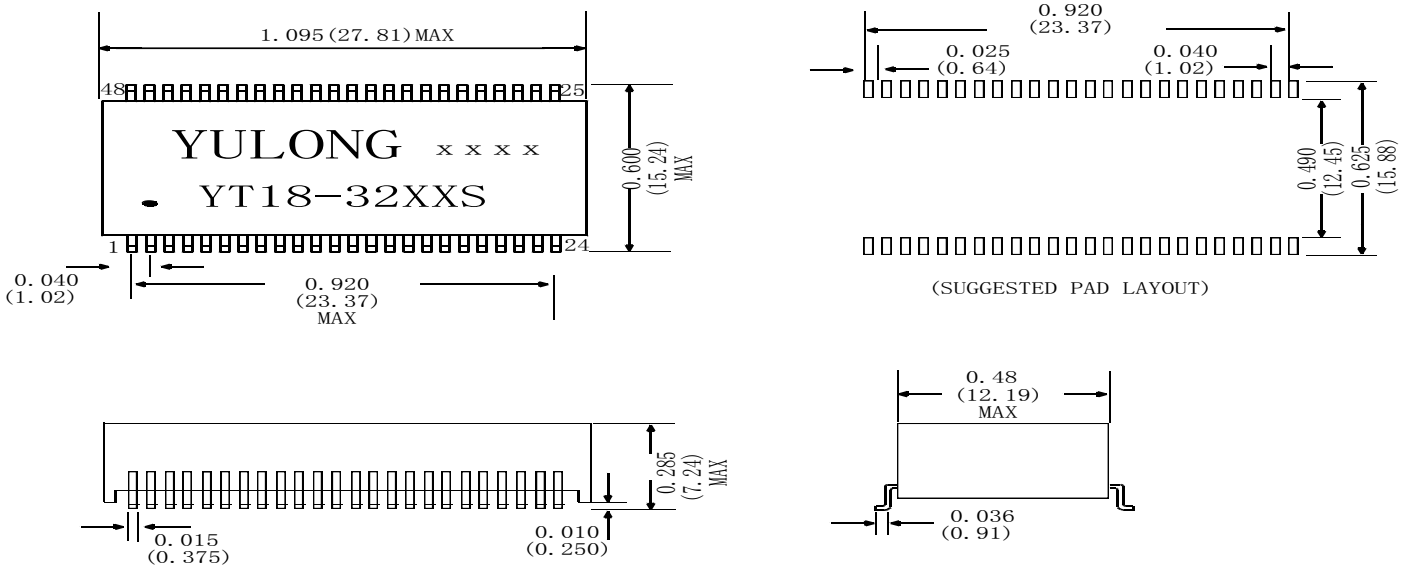

NOTE:Dimensions:inches/(mm) unless otherwise specified all tolerances are±0.010(0.25)

YuTai Electronics Co.,Ltd TEL:86-574-63620701 Http://www.yutai-elec.com E-mail:sales@yutai-elec.com