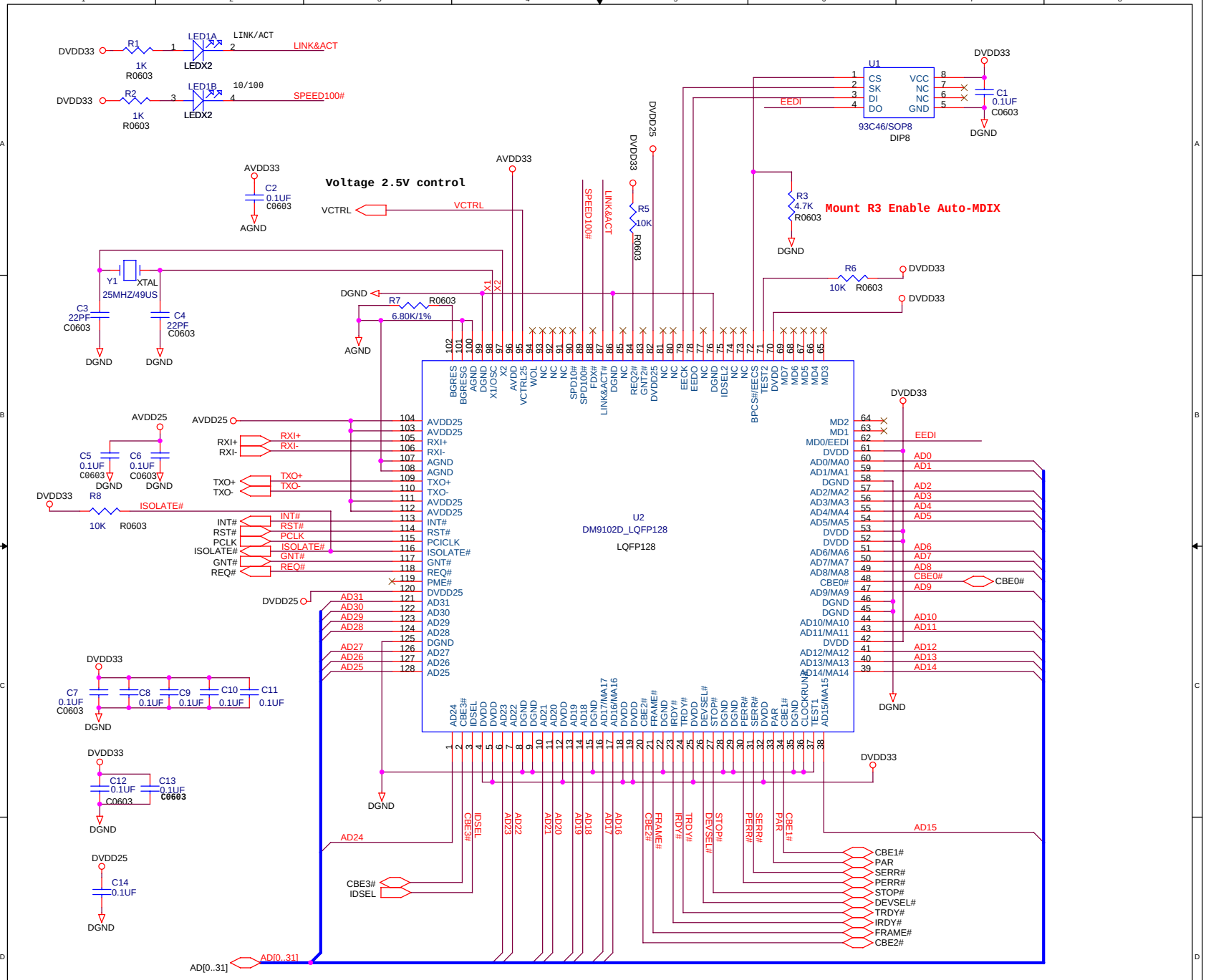

DAVICOM Semiconductor,Inc.

Title: 10/100M LAN CARD

Size	Document Number	Rev
Custom	DM9102D	3.0

Date: Thursday, May 26, 2005 Sheet 1 of 2

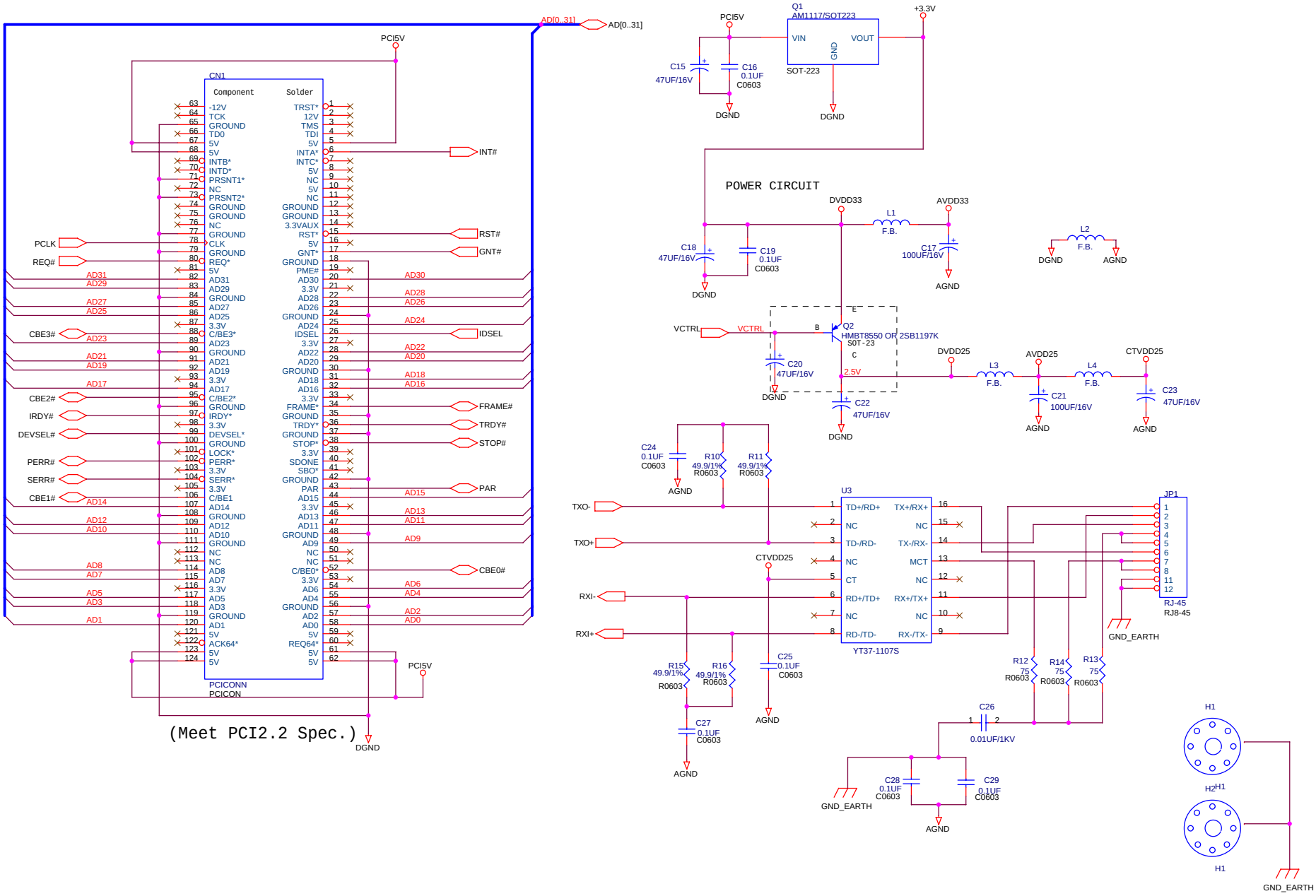

DAVICOM Semiconductor,Inc.	
Title	10/100M LAN CARD
Size Custom	Document Number DM9102D — Rev 3.0
Date: Thursday, May 26, 2005	Sheet 2 of 2